AMBAT ICONCRANES PVT. LTD.

ICON™

An ISO 9001:2008 Company

" LET US MEET n LIFT "

Wire Rope electric Host

SALIENT FEATURES:

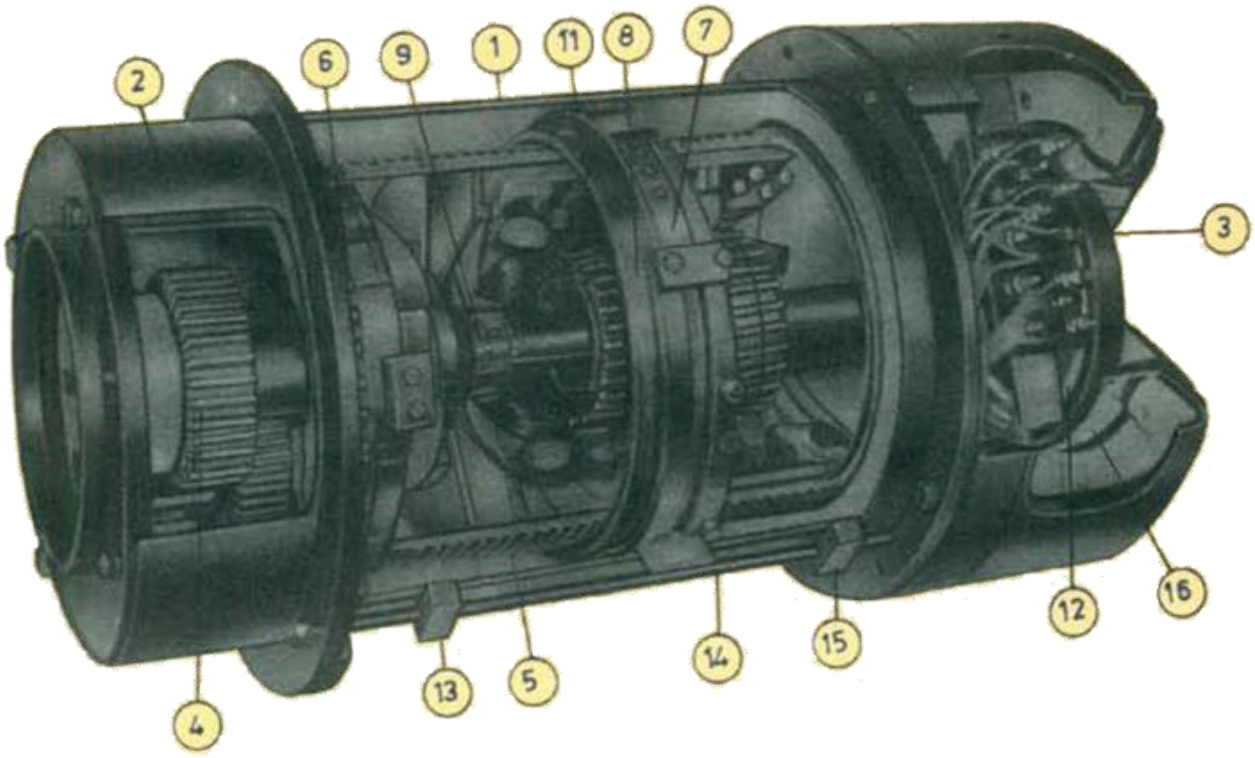

MAIN HOUSING : All hoist parts are enclosed in the main housing (1) thus forming a better looking integral uint.The main housing like the rope drum is also of rolled and welded construction, equipped with mounting bracket.

ROPE DRUM : The rope drum (5) is rolled welded and precision machined. This rope drum is supported on large diameter roller bearings (6) on both ends and the drive is through internal gears. The ample drum diameter

ensures the best possible working condition for the wire rope.

MOTOR : The motor (10) is three phase squirrel cage, conical rotor type working on 440 volts, 50 c/sec. A.C. supply. This motor is specially designed for hoist and crane and is insulated by class 'F' type 0 insulation according to B.S. : 2613. The starting and stalling torques of this motor are 220% and 290% of the full load torque. The motor is rated at 40% ED.

GEAR BOX : The gear box (2) is made out of high grade cast iron. The precision spur gears (4) are machined form alloy steel and are fitted with ball! needle roller bearings. The gear box is filled with grease.

BRAKE : The axial movement of the rotor is one of the characteristics of the conical rotor type of motor. This characteristic is taken advantage of in the actuation of the brake. When the motor is started the rotor (11) is axially pulled into the magnetic centre of the stator and the brake is released. As soon as the current is cut off the brake spring (9) presses the brake disc (12) against the cover and the brake is applied. The braking torque is 100% above the motor torque ate the rated load. The maintenance and adjustment of the brake is very simple due to system and can be done without removing any part. The brake disc and brake end cover (3) are both made of high grade cast iron and the brake lining is of 'Ferrodo' type.

ROPE GUIDE : The rope guide (7) is made of high grade cast iron. The rope tightener (8) is built-in the rope guide itself. This rope guide moves on the drum like a nut and prevents the rope form overriding and loosening.

LIMIT SWITCHES : Every hoist is provided with built-in limit switches (16) to control the top and bottom positions of the hook. Tappets (13&15) can be adjusted to any position in between the range provided. These limit switches are actuated by the rope guide.

CONTROL : The hoist is controlled by a pendant push button station. Supply to the pendant pust button is of 110 volts as per IS specification.

ROPE : Generally 6x37 construction fibre core, pre-formed type, ungalvanised wire rope is supplied. (Galvanised and steel core wire ropes can also be supplied, if specifically asked for.)

MICROSPEED : All hoist can be fitted with a micro speed attachment which reduces the hoisting speed to 1/10 the of the main hosting speed. The micro speed attachment works independent of the load and main hoist. There is a separate control for the micro speed. This arrangement is invaluable in the handling of bulky, heavy and delicate loads.

TESTING : Every hoist unit before despatch is tested at 125% of the rated load capacity on single fall of rope. Only after all the components pass the rigorous inspection tests, the hoist is approved for despatch.

Load Kg.	Height of lift Approx. Meters	Hoisting speed meters/minute	Motor BHP (approx.)	Model Hoist	Wire Rope Dia (mm)	Number of falls of rope	Headroom (mm)	MOTOR DRIVEN TROLLEY						FIX MOUNTING TYPE					
								L (mm)	A (mm)	B (mm)	C(mm)	E(mm)	Wt. ton.	Headroom (mm)	L(mm)	A (mm)	B(mm)	C(mm)	Approx. wt
250	11.5	11	1	SM-HH-N1	6	1	750	590	285	270	150	395	0.170	650	600	318	340	260	0.115
	20.5	11	1	SM-HH-X1	6	1	750	680	285	270	150	395	0.200	650	720	408	340	260	0.135
500	5.75	5.5	1	SM- HH-N2	6	2	800	590	195	145	150	395	0.200	750	600	318	340	260	0.135
	10.25	5.5	1	SM-HH-X2	6	2	800	680	195	145	150	395	0.240	750	720	408	340	260	0.145
	14.5	20	3	SM-221-N1	8	1	750	675	285	285	150	395	0.160	690	675	380	340	260	0.135
	23	20	3	SM-221-X1	8	1	750	790	285	285	150	395	0.180	690	790	495	515	260	0.145
750	3.75	3.67	1	SM-HH-N3	6	3	900	635	400	545	150	395	0.200	900	600	318	515	260	0.135
	7	3.67	1	SM-HH-X3	6	3	900	680	400	545	150	395	0.240	900	720	408	515	260	0.145
1000	3	2.75	1	SM-HH-N4	6	4	850	635	400	545	150	395	0.200	900	600	318	515	260	0.135
	5.5	2.75	1	SM-HH- X4	6	4	850	680	400	545	150	395	0.240	900	720	408	340	260	0.145
	7.25	10	3	SM-221-N2	8	2	800	675	195	145	150	395	0.160	750	675	380	340	260	0.140
	11.5	10	3	SM-221-X2	8	2	800	790	195	145	150	395	0.295	925	790	495	500	260	0.150
1500	4.75	6.67	3	SM-221-N3	8	3	920	675	370	545	150	395	0.295	925	675	380	340	260	0.150
	7.5	6.67	3	SM-221-X3	8	3	920	790	370	545	150	395	0.135	925	790	495	500	260	0.160
	20	14	6.5	SM-223-N1	13	1	850	965	385	655	150	400	0.590	950	965	530	500	260	0.385
	30.5	14	6.5	SM-223-X1	13	1	850	1125	385	655	150	400	0.620	950	1125	690	515	310	0.425
2000	3.75	5	3	SM-221-N4	8	4	900	675	400	545	150	395	0.300	900	675	380	515	310	0.155
	5.75	5	3	SM-223-X4	8	4	900	790	400	545	150	395	0.320	900	790	495	580	260	0.165
2500	26.25	10	8	SM-225-N1	16	1	1250	1150	485	640	150	415	0.750	1145	1165	710	580	260	0.650
	42.5	10	8	SM-225-X1	16	1	1250	1410	485	640	150	415	0.860	1145	1420	966	580	400	0.770
	72.5	20	15	SM-228-N1	16	1	1250	1870	485	640	150	415	1.080	1145	1870	1415	500	400	0.890
3000	10	7	6.5	SM-223-N2	13	2	1050	965	250	210	150	400	0.525	1015	965	530	500	310	0.400
	15.25	7	6.5	SM-223-X2	13	2	1050	1125	250	210	150	400	0.575	1015	1125	690	815	310	0.440
5000	6.5	4.67	6.5	SM-223-N3	13	3	1450	965	510	800	150	410	0.760	1450	965	530	815	310	0.460
	10.25	4.67	6.5	SM-223-X3	13	3	1450	1125	510	800	150	410	0.830	1450	1125	690	580	310	0.500
	13.25	5	8	SM-225-N2	16	2	1450	1165	295	285	150	415	0.840	1300	1185	710	580	400	0.685
	21.25	5	8	SM-225-X2	16	2	1500	1410	295	285	150	415	0.950	1300	1410	966	580	400	0.785
	36.25	10	15	SM-228-N2	16	2	1500	1870	295	285	150	415	1.170	1300	1870	1415	815	400	0.905
6000	5	3.5	6.5	SM-223-N4	13	4	650	965	510	800	150	410	0.760	1450	965	530	815	310	0.500
	7.75	3.5	6.5	SM-223-N4	13	4	650	1125	510	800	150	410	0.830	1450	1125	690	1035	310	0.540
7500	8.75	3.35	8	SM-223-X4	16	3	1800	1150	670	815	150	415	1.340	1760	1165	710	1035	400	0.730
	14	3.35	8	SM-225-N3	16	3	1800	1410	670	815	180	415	1.520	1760	1410	968	1035	400	0.850
	24.5	6.67	15	SM-225-X3	16	3	1800	1870	670	815	180	515	1.790	1760	1870	1415	1035	400	0.970
10000	6.75	2.5	8	SM-228-N3	16	4	700	1150	670	815	180	415	1.490	1775	1165	710	1035	400	0.750
	10.75	2.5	8	SM-225-N4	16	4	700	1410	670	815	180	415	1.670	1775	1410	966	1035	400	0.870
	18.5	5	15	SM-225-X4	16	4	700	1870	670	815	180	515	1.940	1775	1870	1415	1035	400	0.990
12500	5.25	2	8	SM-228-N4	16	5	2100	1445	675	925	180	515	1200	2230	1165	710	1035	400	0.830
	8.5	2	8	SM-225-N5	16	5	2100	1445	675	925	180	515	1.300	2230	1410	966	1035	400	3.950
	14.5	4	15	SM-225-X5	16	5	2100	1895	675	925	180	515	1.500	2230	1870	1415	1035	400	1.050
15000	4.25	1.67	8	SM-225-N6	16	6	2500	1445	800	925	180	510	1.500	2300	1165	710	1035	400	0.880
	7.25	1.67	8	SM-225-X6	16	6	2500	1445	800	925	180	510	1.600	2300	1410	966	1035	400	1.000
	12.25	3.3	15	SM-228-N6	16	6	2500	1900	800	925	180	510	1.800	2300	1870	1415	1035	400	1.100
20000	5.5	1.25	8	SM-225-X8	16	8	2800	1630	850	990	180	510	1.780	2500	1410	966	1035	400	1.050
	9.25	2.5	15	SM-228-N8	16	8	2800	1900	850	990	180	510	1.900	2500	1870	1415	1010	400	1.150
25000	4.25	1	8	SM-225-X10	16	10								2600	1410	966	1010	400	1.100
	7.25	2	15	SM-228-N10	16	10								2600	1870	1415	1010	400	1.200
30000	3.75	0.84	8	SM-225-X12	16	12								2700	1410	966	1010	400	1.150
	6.25	1.7	15	SM-228-N12	16	12								2700	1870	1415	1010	400	1.250

NOTE :

- Above specifications can be modified to meet individual requirement. Dimensions are subject to change without notice.
- Dimensions not indicated can be furnished on placement of order.
- Dimensions of flexible trolley for hoist to run on curved beam can be furnished on request

FIXED MOUNTED HOIST

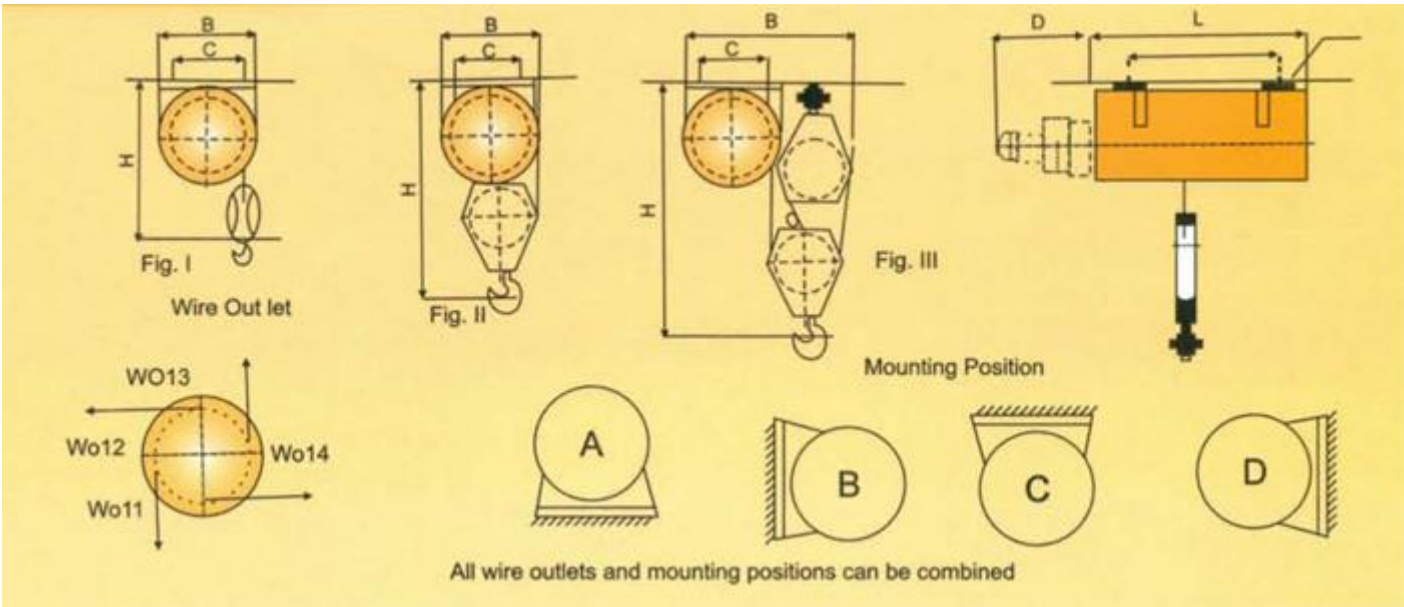

These are available in all types of mountings, e.g. floor mounted, ceiling mounted, wall mounted etc. They are used for loading and unloading transportation vehicles, through floor hatches or outside the wall, and for serving production machinery.
When ordering, please state in what position the hoist is to be mounted and wire outlet (WO) required.

HOIST WITH TROLLEY

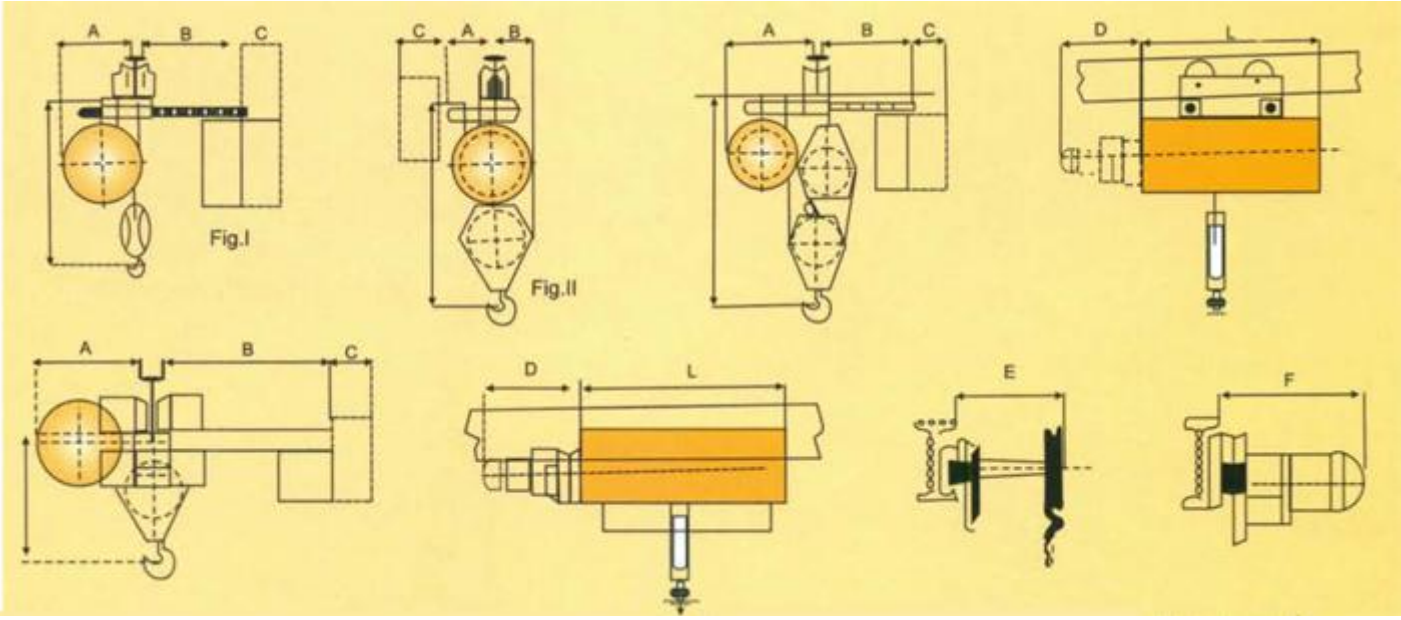

Hoists can be equipped with trolley for horizontal travelling; The trolley is fabricated from components. bolted and welded together and carried by travelling wheels supported on ball bearings. Similar loads can be moved with a push type trolley whilst the hand chain or motor driven should be used for heavier loads.
The motor driven trolley would be the best solution of the hoist unit is required to move loads rapidly.
The drive motor is of squirrel cage type with built-in brake.
The motor drives one or more of the trolley wheel's gear rim.
Wherever there are limitations to the available head room (dimension H), short head room trolley can be supplied (refer figure IV above.)

HOIST ON FLEXIBLE TROLLEY

Where the trolley has to negotiate a curved track, or the material movement is from on bay to another, this type of arrangement fulfils the requirement.
The minimum radius of curvature the flexible trolley can negotiate is 1.5 meters.

EXTENDED TROLLEY

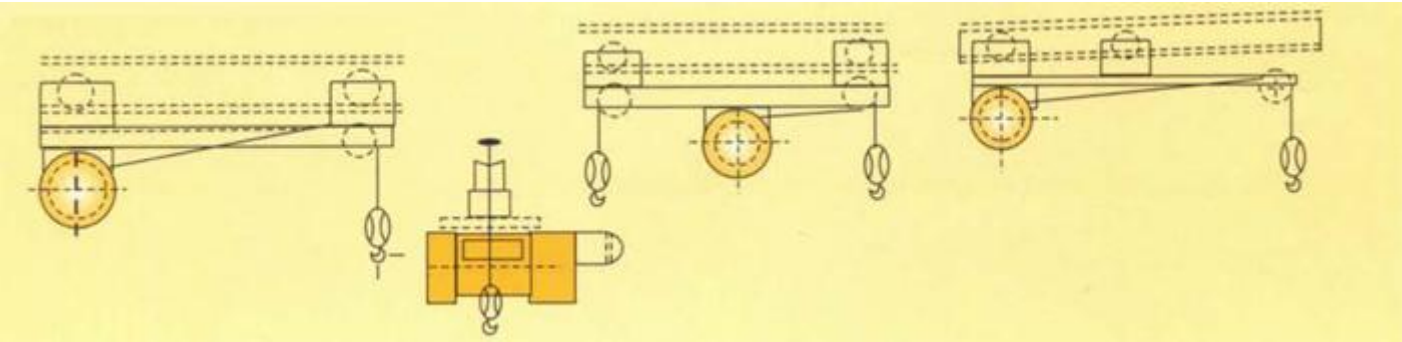

These are particularly required when the load is bulky or for handling material from furnaces/chemical baths. This trolley can also be provided with two hooks to deal with loads like paper rolls, logs etc. When the loads go beyond the overhead track, an outrigger type of extended trolley is indispensable. These are used for loading on and unloading form ships in stream. Driver's cabins can also be built with the trolley.

CRAB

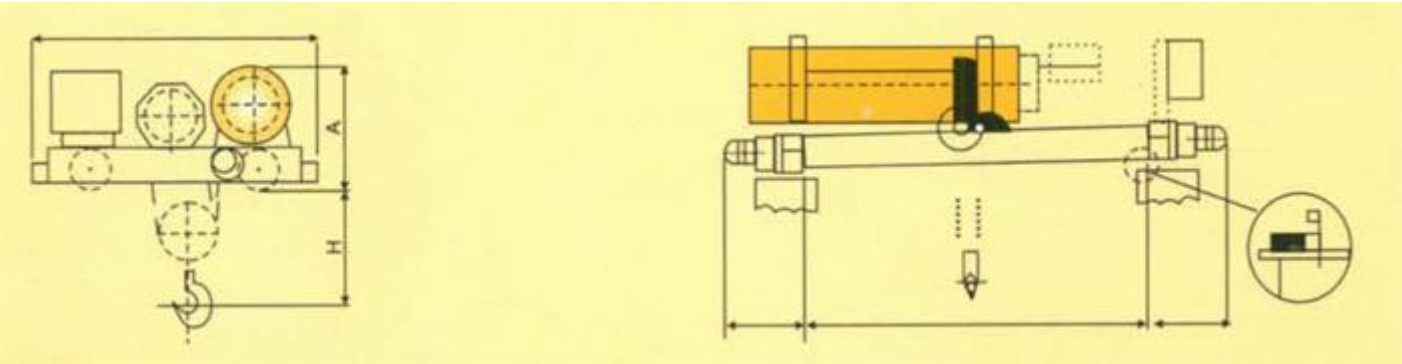

Crabs can be supplied as standard units or can be custom made. They offer maximum advantage when working in open. These crabs can have single or twin hoist units as required. The driving arrangement can either be with hand-geared or motor driven type. Micro speed arrangement in hoisting can be provided if required.

TWIN HOISTS ON MONORAIL TROLLEY

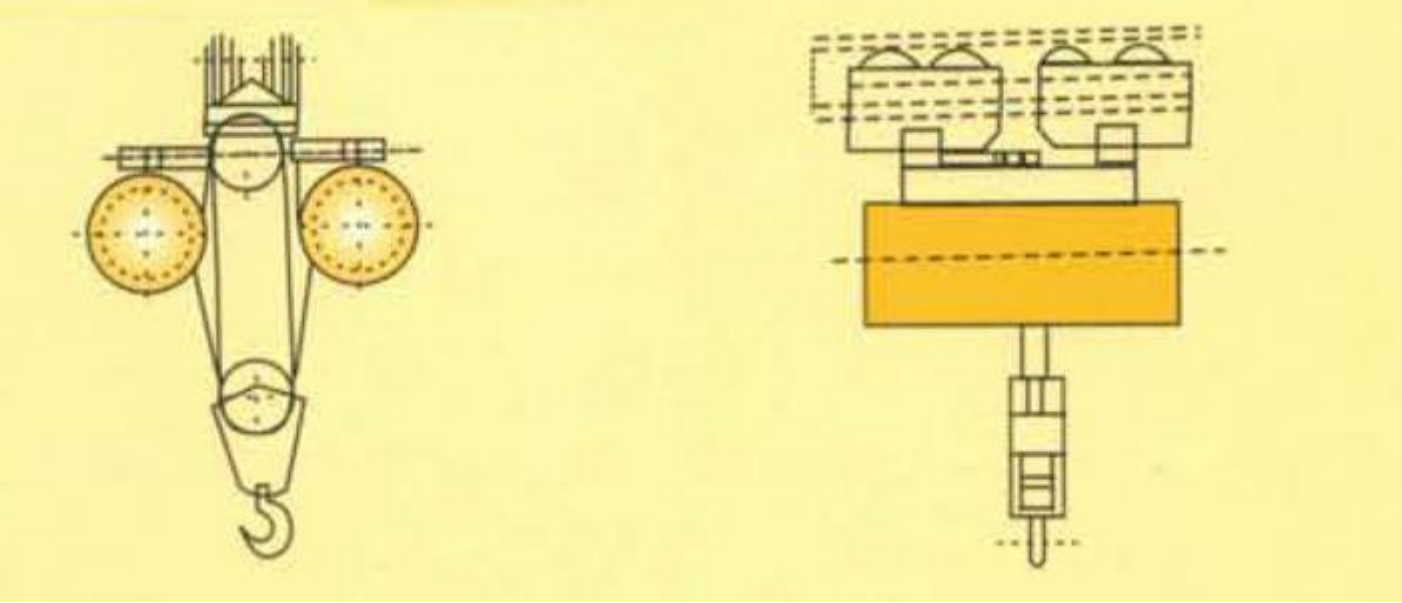

For exceptionally high heights of lifts this arrangement if very useful. It also offers the option of two hoisting speeds. The maximum heights of lift is 73m for a load of 5 tonnes, for 288 type twin hoists.

MICRO SPEED ATTACHMENT

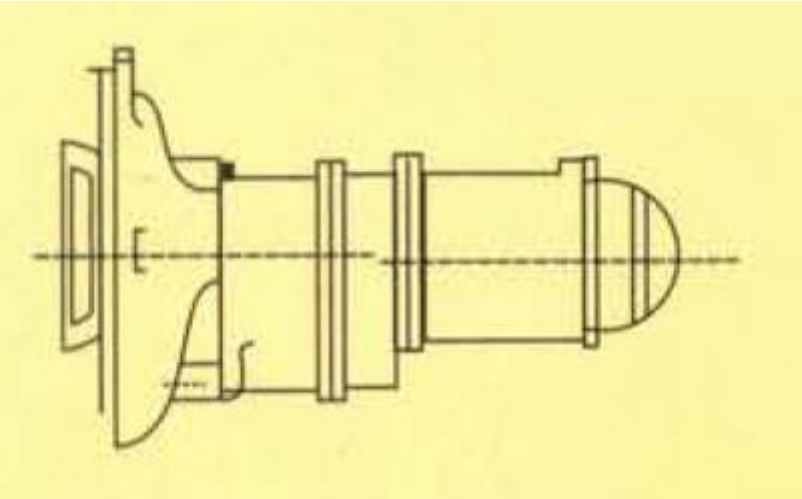

This attachment when fitted to the hoist can provide 1/10 the of the hoisting speed of main hoist independent of the load. A Separate push button interlocked with the main hoist push button controls the attachment. Thus either of the two can be operated at a time.